1883802
Queen Cathedral Bed
Parts and Hardware List

A.	Headboard	1 pc
B.	Headboard Posts	2 pcs
C.	Post Connector	1 pc
D.	Footboard	1 pc
E.	Side Rails	2 pcs
F.	Center Support Slat	1 pc
G.	Support Slats	2 pcs
H.	Leg Supports	4 pcs
I.	Allen Head Bolts (M6 x 55)	6 pcs
J.	Allen Head Bolts (M8 x 25)	8 pcs
K.	Allen Head Bolts (M6 x 30)	6 pcs
L.	Allen Head Bolts (M6 x 12)	4 pcs
M.	Large Flat Washers	8 pcs
N.	Small Flat Washers	16 pcs
O.	Nuts	10 pcs
P.	Spanner	1 pc
Q.	Large Allen Head Wrench	1 pc
R.	Small Allen Head Wrench	1 pc

∗ Please make sure that you have all the parts and hardware indicated above before you begin assembly of this item.
∗ Use the hardware illustrations to determine correct piece and size.
∗ This item should be assembled on a soft surface to prevent scratching the finish during assembly.
∗ This item may require periodic tightening.

1883802
Queen Cathedral Bed
Hardware Illustrations

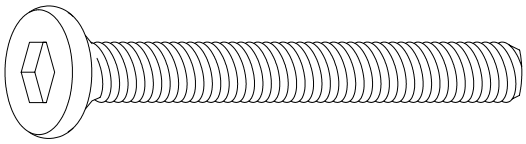

I. Allen Head Bolt (M6x55)

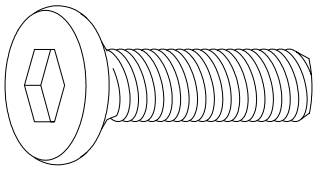

J. Allen Head Bolt (M8x25)

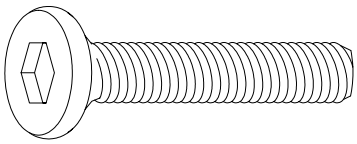

K. Allen Head Bolt (M6x30)

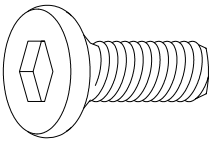

L. Allen Head Bolt (M6x12)

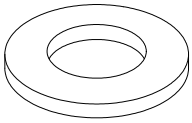

M. Large Flat Washer

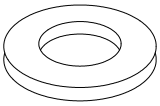

N. Small Flat Washer

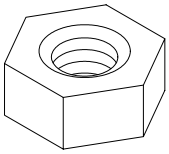

O. Nut

1883802
Queen Cathedral Bed

Attach Headboard Posts & Post Connector

Parts required

A.	Headboard	1 pc	N.	Small Flat Washers	8 pcs
B.	Headboard Posts	2 pcs	O.	Nuts	4 pcs
C.	Post Connector	1 pc	P.	Spanner	1 pc
I.	Allen Head Bolts (M6 x 55)	6 pcs	R.	Small Allen Head Wrench	1 pc

1. **Attach Post Connector (C)** Align the pre-drilled holes in the Headboard Posts (B) with the pre-threaded holes in the ends of Post Connector (C). Insert the Allen Head Bolts (M6 x 55) (I) through the pre-drilled holes in the Headboard Posts (B) into the pre-threaded holes in the ends of Post Connector (C). Secure Allen Head Bolts (I) using Small Allen Head Wrench (R). See Illustration #1. **Do not fully tighten at this time.**
2. **Attach Headboard (A)** Insert the top of Headboard Posts (B) into the post tubes of Headboard (A). Insert the Allen Head Bolts (M6 x 55) (I) through the Small Flat Washer (N) and into the pre-drilled holes in the top of Headboad Posts (B). Secure with Small Flat Washers (N) and Nuts (O) using Spanner (P) and Small Allen Head Wrench (R). See Illustration #1.

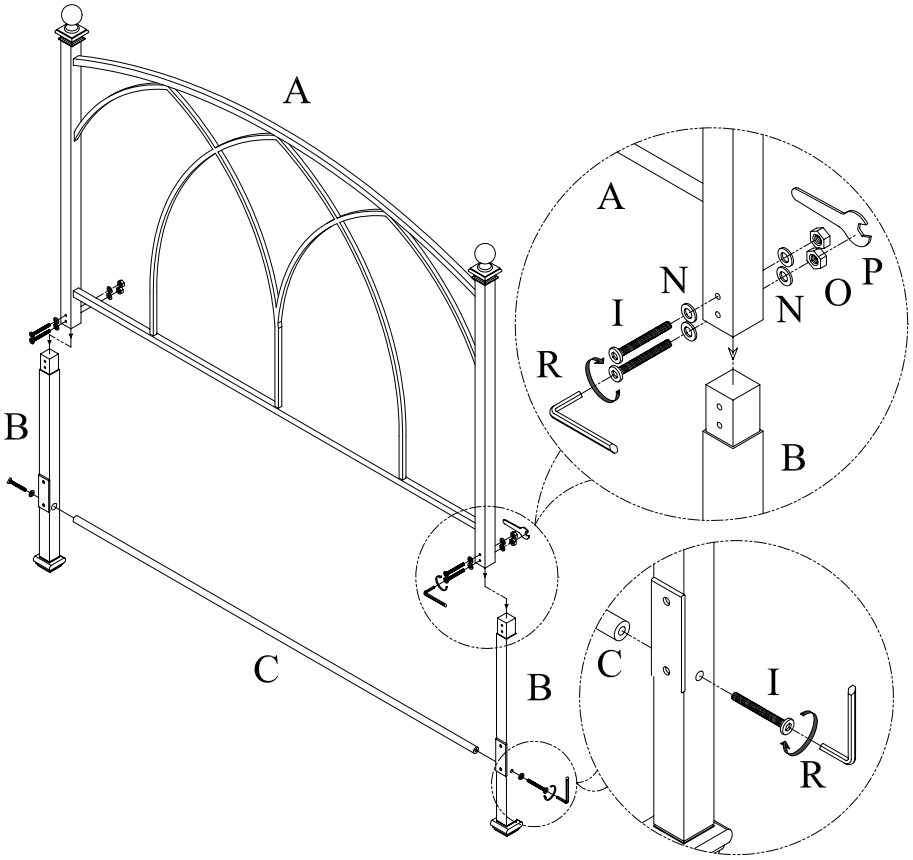

Illustration # 1

1883802
Queen Cathedral Bed

Attach Side Rails, Leg Supports & Support Slats

Parts required

B.	Headboard Posts	2 pcs	L.	Allen Head Bolts (M6 x 12)	4 pcs
D.	Footboard	1 pc	M.	Large Flat Washers	8 pcs
E.	Side Rails	2 pcs	N.	Small Flat Washers	6 pcs
F.	Center Support Slat	1 pc	O.	Nuts	6 pcs
G.	Support Slats	2 pcs	P.	Spanner	1 pc
H.	Leg Supports	4 pcs	Q.	Large Allen Head Wrench	1 pc
J.	Allen Head Bolts (M8 x 25)	8 pcs	R.	Small Allen Head Wrench	1 pc
K.	Allen Head Bolts (M6 x 30)	6 pcs			

3. **Attach Side Rails (E)** Align the pre-drilled holes in the ends of the Side Rails (E) with the pre-threaded holes in the Headboard Posts (B). Make sure the small square tube attached to the Side Rails (E) is facing the inside of the bed. Secure the Side Rails (E) to the Headboard Posts (B) with the Allen Head Bolts (M8 x25) (J) and Large Flat Washers (M) using the Large Allen Head Wrench (Q). See Illustration #2.
4. Repeat above step to attach the Side Rails (E) to the Footboard (D). See Illustration #2. **Fully tighten Allen Head Bolts (I) from Step #1 at this time.**
5. **Attach Leg Supports (H)** Insert the Leg Supports (H) into the short tubes on the Support Slats (G) and Center Support Slat (F). Align the pre-threaded hole in the Leg Supports (H) with the pre-drilled hole in the short tubes. Secure in place with the Allen Head Bolts (M6 x 12) (L) using the Small Allen Head Wrench (R). See Illustration #2.
6. **Attach Center Support Slat (F) & Support Slats (G)** With the square tube facing up, align the pre-drilled holes in the Side Support Slats (G) & Center Support Slat (F) with the pre-drilled holes in the Side Rails (E). Secure in place with the Allen Head Bolts (M6 x 30) (K), Small Flat Washers (N), and Nuts (O) using the Small Allen Head Wrench (R) and the Spanner (P). Illustration #2.

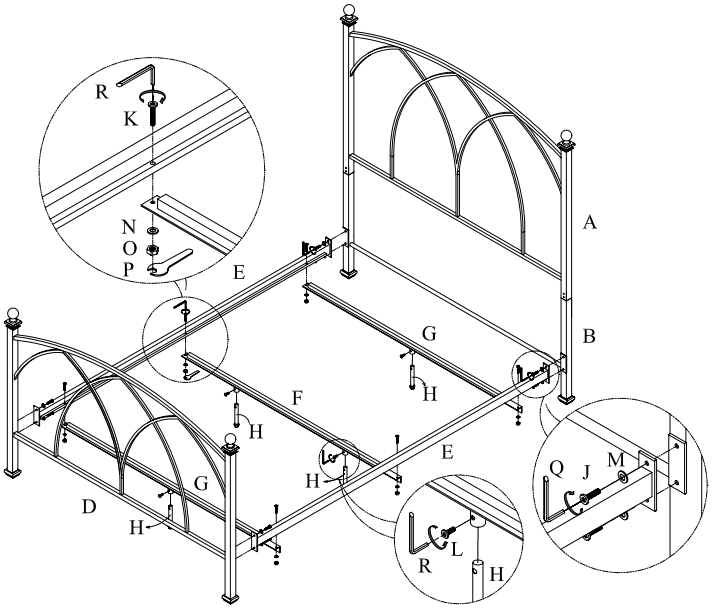

Illustration #2